Monterey 100cm Square Table

2MT10.805

1

Ref: 3827 – x1 Allen Key – 4mm Ball End
Ref: 1999 – x8 Stainless Steel Screws – M6 x 20mm
Ref: 2235 – x16 Stainless Steel Screws – 4.2mm x 19mm

Skin Pack **Ref: 3822**

2

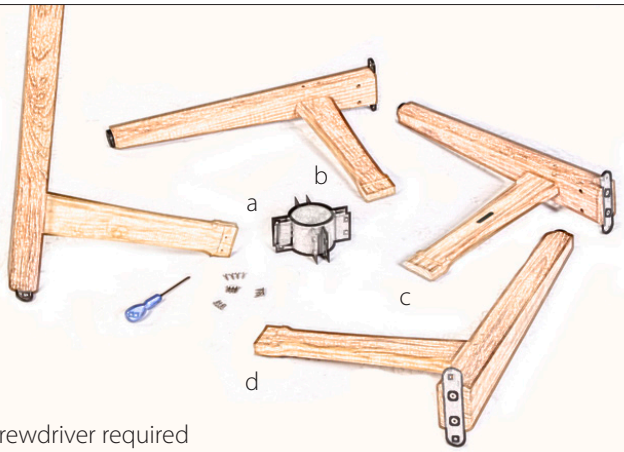

Screwdriver required

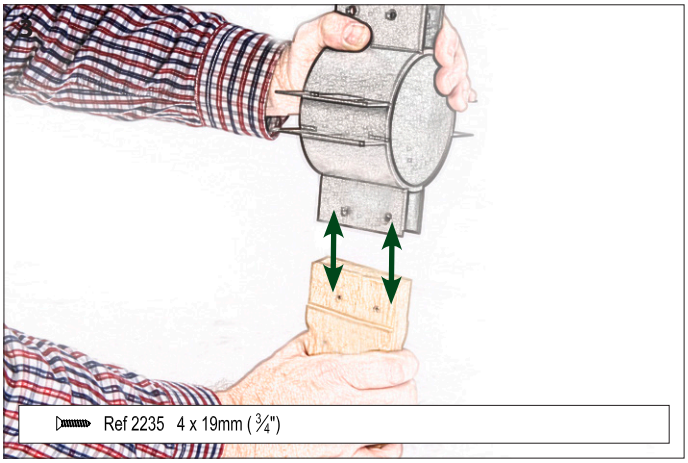

Ref 2235 4 x 19mm (¾")

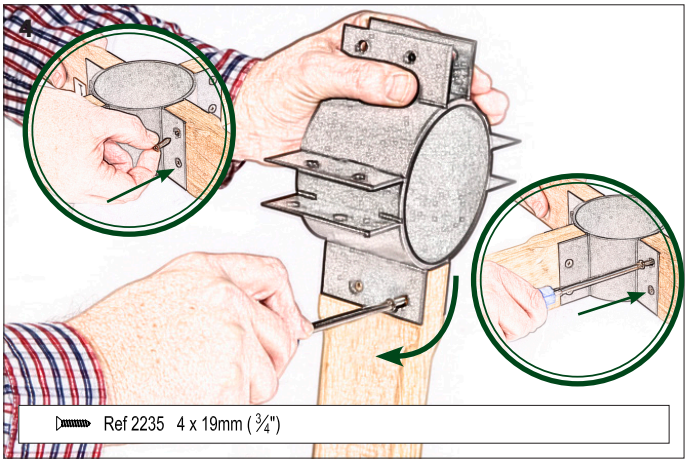

Ref 2235 4 x 19mm (¾")

5

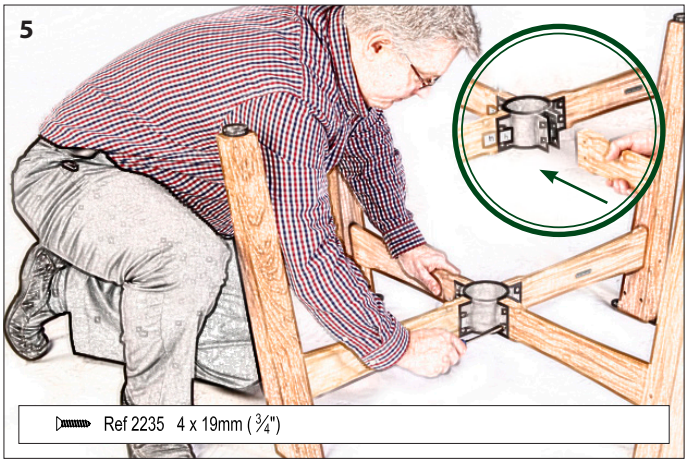

Ref 2235 4 x 19mm (¾")

6

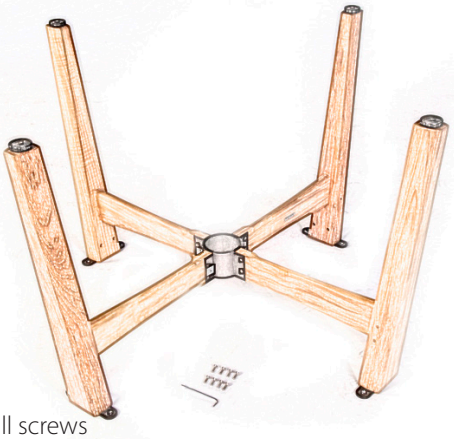

Tighten all screws

Barlow Tyrie Limited – Braintree, Essex CM7 2RN, England +44 (0)1376 557 600 – www.teak.com

Monterey 100cm Square Table

2MT10.805

7

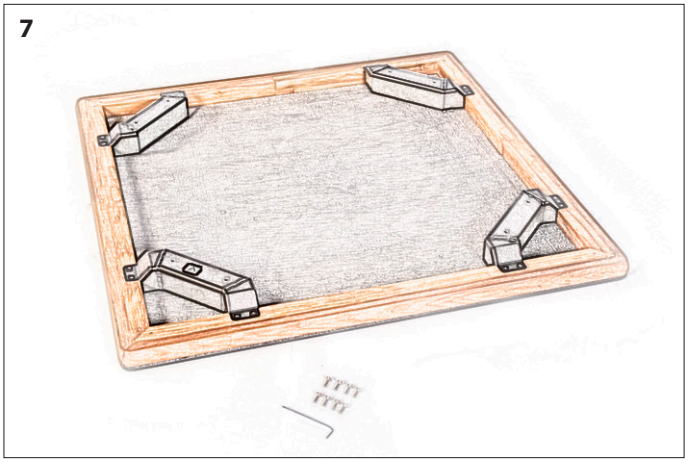

8

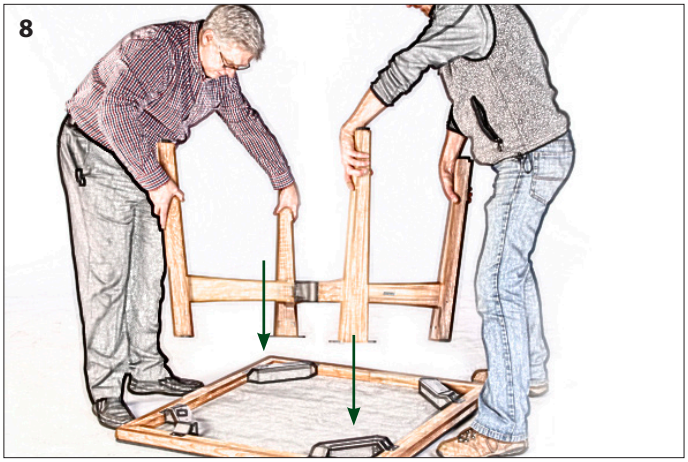

9

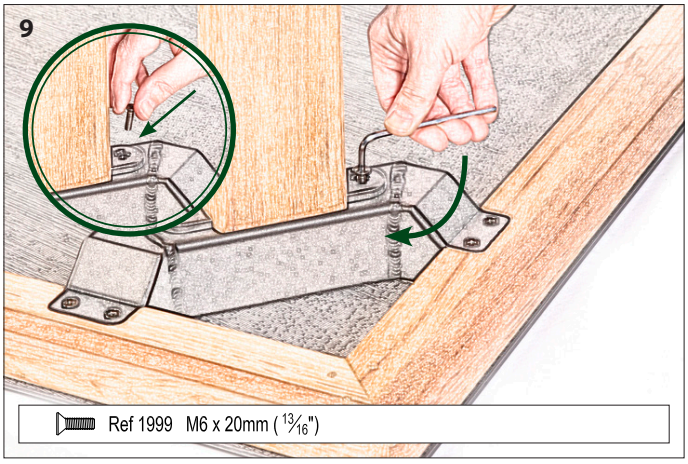

10

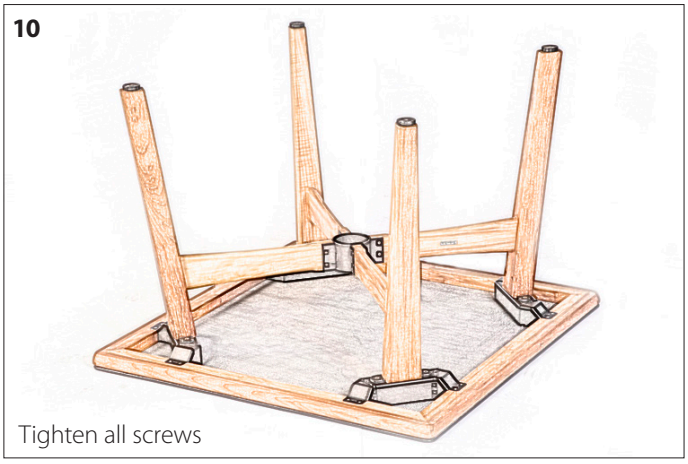

Tighten all screws

11

12

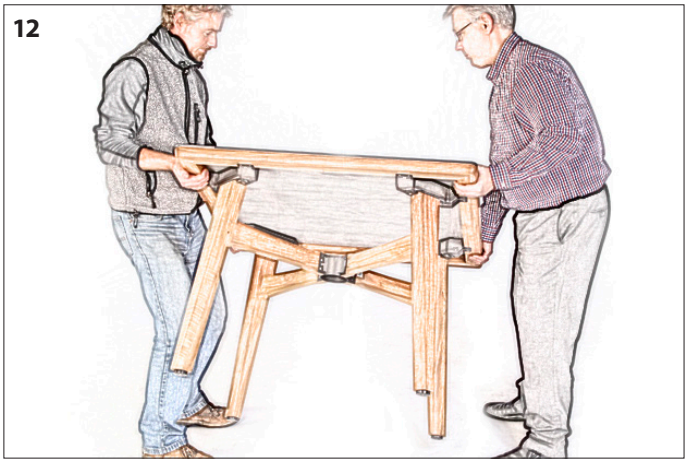

Moneterey 300cm Rectangular Table

2MT30.805

1

Ref: 3827 – x1 Allen Key – 4mm Ball End
Ref: 1999 – x8 Stainless Steel Screws – C/S M6 x 20mm
Ref: 3486 – x10 Stainless Steel Screws – C/S M6 x 50mm
Ref: 8888 – x2 Washers

Skin Pack **Ref: 3820**

2

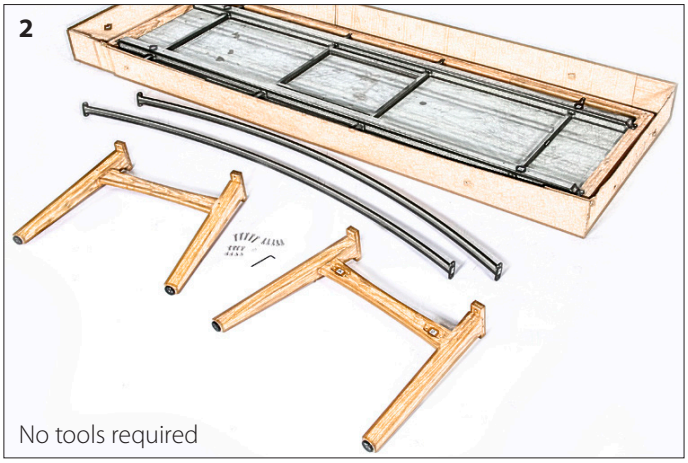

No tools required

3

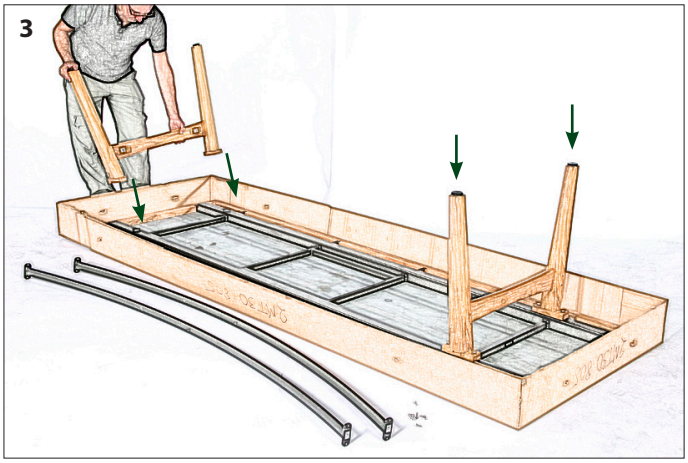

4

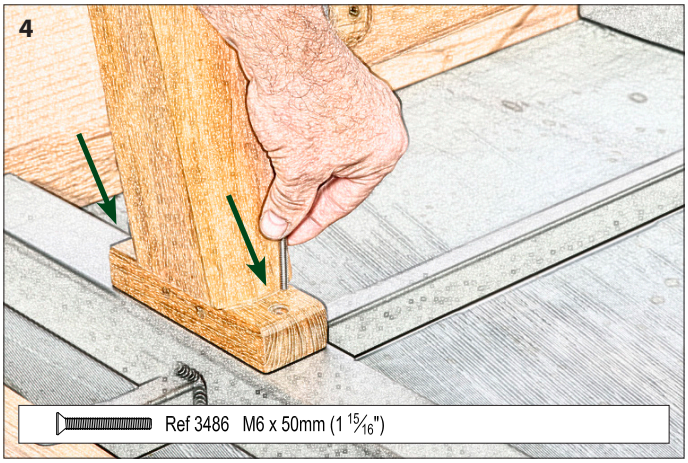

5

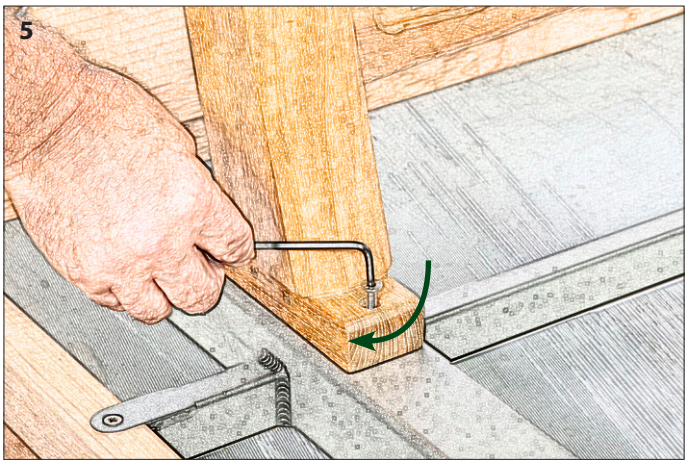

6

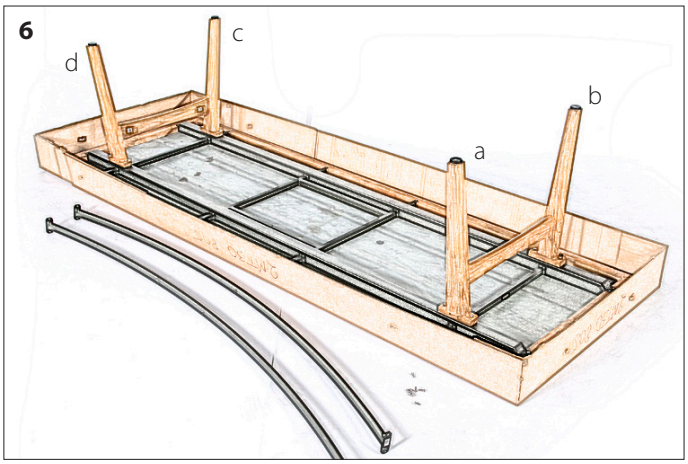

Moneterey 300cm Rectangular Table
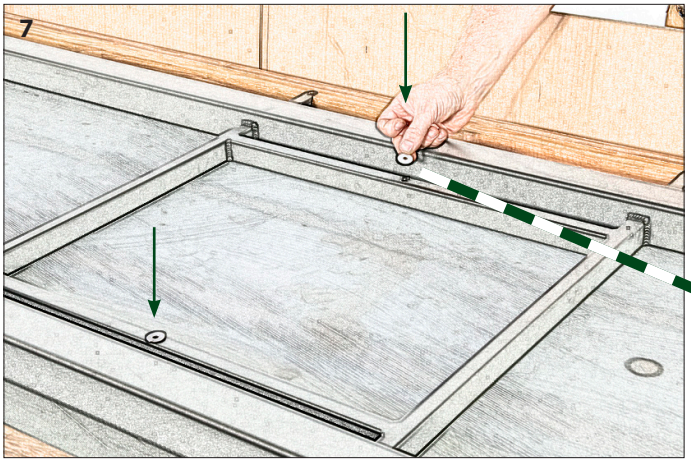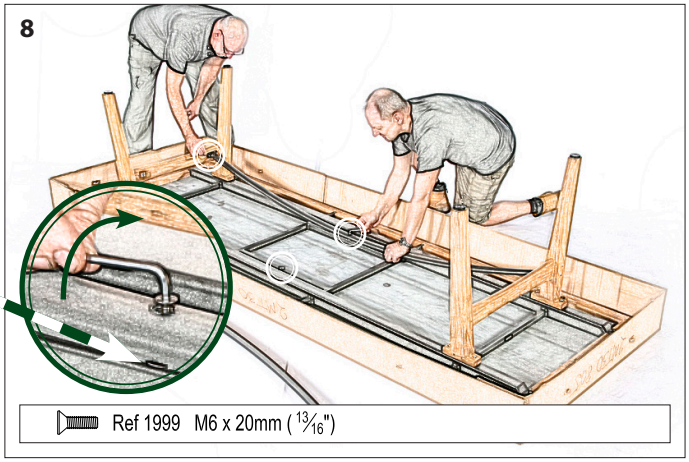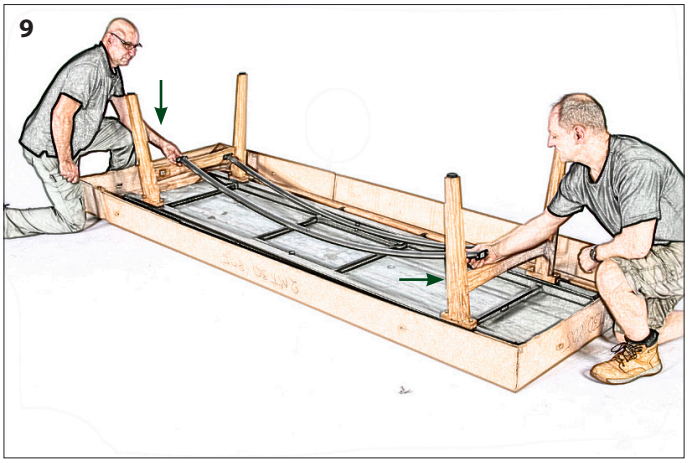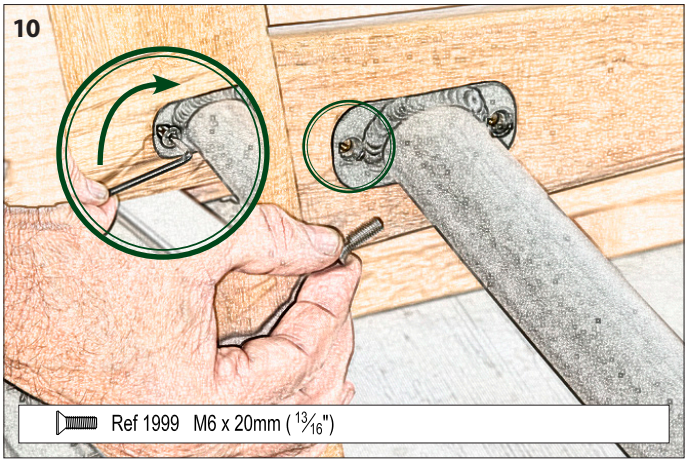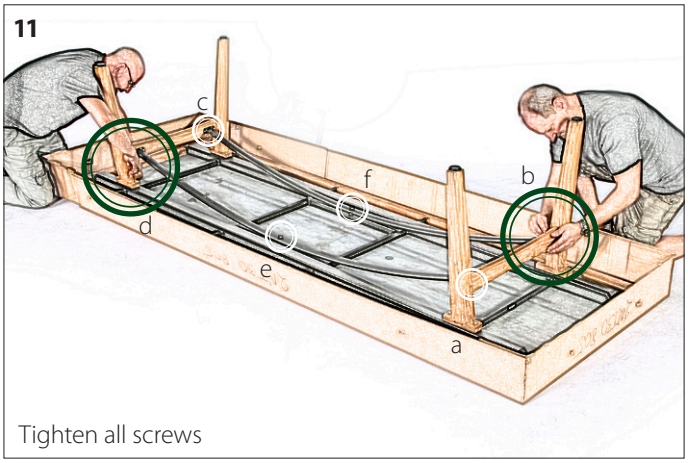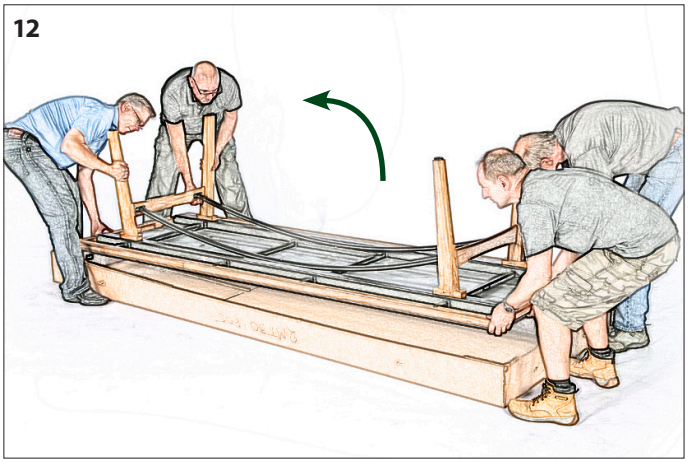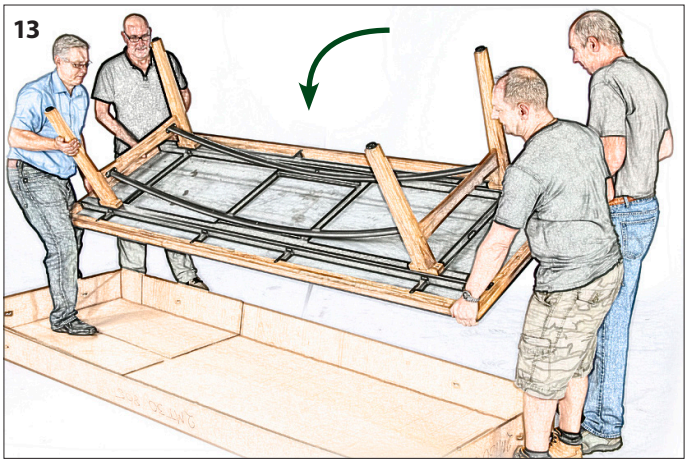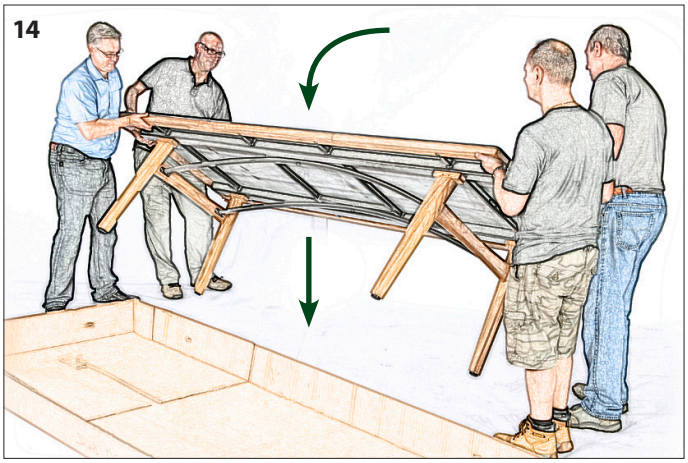
2MT30.805